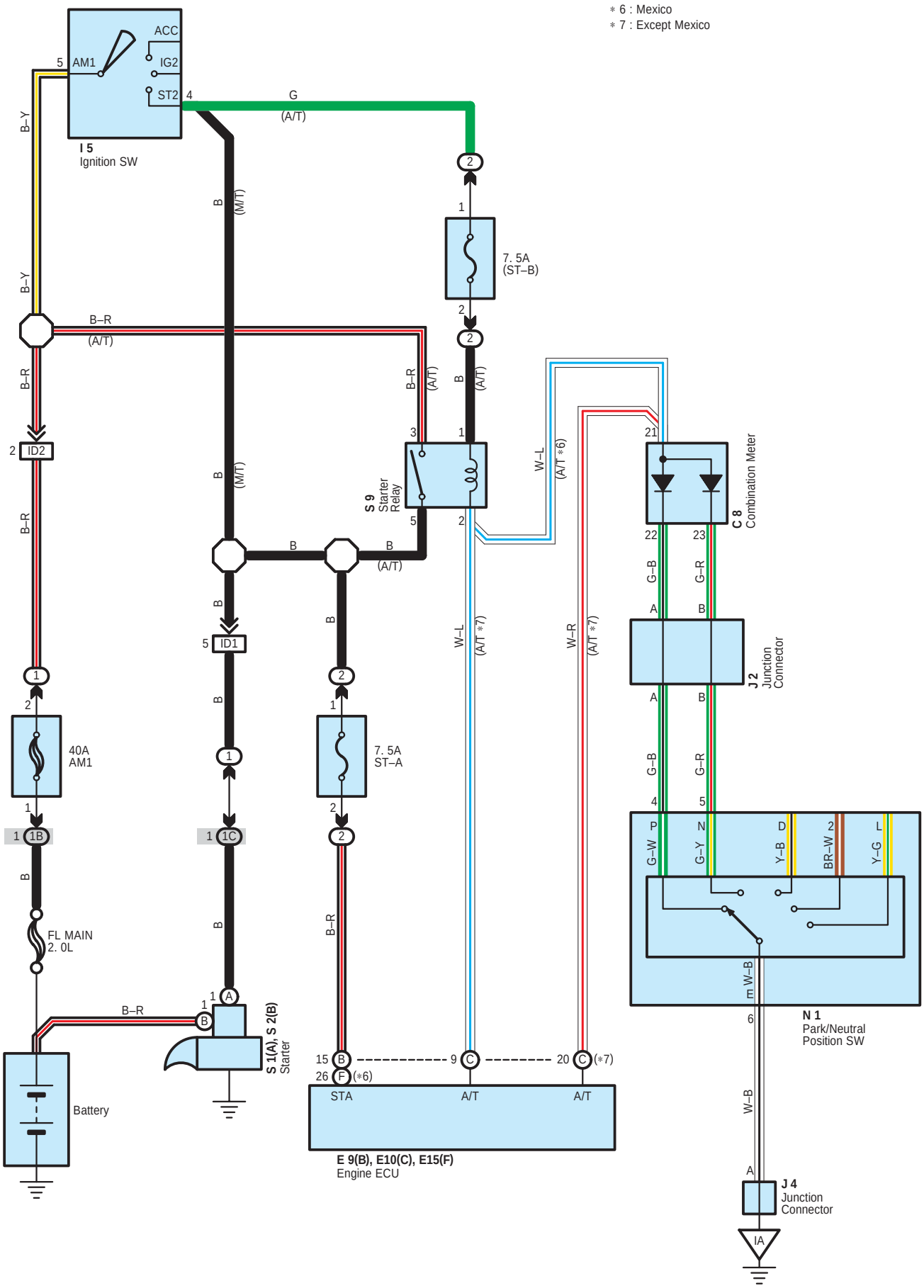
∗ 6 : Mexico
∗ 7 : Except Mexico
ACC
IG2
ST2
AM1
I 5
Ignition SW
G
(A/T)
B–Y
B–R
(A/T)
B
(M/T)
7. 5A
(ST–B)
ID2
ID1
S 9
Starter
Relay
W–L
(A/T ∗6)
(A/T ∗7)
W–R
C 8
Combination Meter
G–B
G–R
J 2
Junction
Connector
40A
AM1
7. 5A
ST–A
FL MAIN
2. 0L
Battery
S 1(A), S 2(B)
Starter
E 9(B), E10(C), E15(F)
Engine ECU
STA
A/T
N 1
Park/Neutral
Position SW
G–W
G–Y
Y–B
BR–W
Y–G
m W–B
W–B
J 4
Junction
Connector
IA

: Parts Location

Code		See Page	Code		See Page	Code		See Page
C8		28 (LHD)	I5		37 (*5)	S1	A	33 (*3)
		38 (*6)			39 (*6)			35 (*4)
E9	B	28 (LHD)	J2		29 (LHD)	S2	B	25 (*1)
		36 (*5)			39 (*6)			27 (*2)
		38 (*6)	J4		29 (LHD)			33 (*3)
E10	C	28 (LHD)			39 (*6)			35 (*4)
		36 (*5)	N1		29 (LHD)	S9		29 (LHD)
		38 (*6)			39 (*6)			39 (*6)
E15	F	28 (LHD)	S1	A	25 (*1)			
I5		29 (LHD)			27 (*2)			

: Relay Blocks

Code	See Page	Relay Blocks (Relay Block Location)
1	22	Engine Room R/B (Engine Compartment Right)
2	23 (LHD)	Fuse Block (Left Kick Panel)
	23 (RHD)	Fuse Block (Right Kick Panel)

: Junction Block and Wire Harness Connector

Code	See Page	Junction Block and Wire Harness (Connector Location)
1B	22	Engine No.2 Wire and Engine Room J/B (Engine Compartment Right)
1C		

: Connector Joining Wire Harness and Wire Harness

Code	See Page	Joining Wire Harness and Wire Harness (Connector Location)
ID1	44 (LHD)	Engine Room Main Wire and Instrument Panel Wire (Right Kick Panel)
	48 (*5)	Engine Room Main Wire and Instrument Panel Wire (Cowl Side Panel RH)
	49 (*6)	
ID2	44 (LHD)	Engine Room Main Wire and Instrument Panel Wire (Right Kick Panel)
	48 (*5)	Engine Room Main Wire and Instrument Panel Wire (Cowl Side Panel RH)
	49 (*6)	

: Ground Points

Code	See Page	Ground Points Location
IA	44 (LHD)	Right Kick Panel
	49 (*6)	Left Kick Panel

* 1 : LHD 3SZ–VE * 2 : LHD K3–VE * 3 : RHD 3SZ–VE * 4 : RHD K3–VE * 5 : RHD w/ Heater * 6 : RHD w/o Heater